DOWNLOAD MULTILINGUAL USER MANUAL

code.ironbaltic.com/u/BObpAXVA

ATV TRAILER

IB-1200

Code 86.1000

Version 26092024

Keep this manual for future reference!

If you need any spare parts, please send this packaging data to your local dealer or to Iron Baltic sales@ironbaltic.com

Contents

EC DECLARATION OF CONFORMITY 4
INTRODUCTION 5
SAFETY INSTRUCTIONS 6
SAFETY LABELS 7
PRODUCT DESCRIPTION 8
USER GUIDE 9
MAINTENANCE 11
SPETSIFICATION 12
ASSEMBLING GUIDE 14

Iron Baltic OÜ

EC DECLARATION OF CONFORMITY

Manufactured by:	Iron Baltic OÜ
Address:	Joa tee 17, Vääna, Harku vald, 76903 Estonia
Product:	**Trailer**
Type:	**IB 1200**
Model:	**86.1000**

Hereby we confirm that this product is in conformity with the requirements of Directive **2006/42/EC,** applicable to the safety and functionality of machinery, regarding the replaceable equipment and it is in compliance with the standard **EN12100** Safety of machinery – General principles for design – Risk assessment and risk reduction.

In witness whereof CE marking is attached to the product.

Place and date of issue of the declaration: Vääna, 05.04.2024

.....
Tiit Norak
Member of the Board

Iron Baltic OÜ
Joa tee 17
Vääna 76903
Estonia

tel (+372) 6533711
info@ironbaltic.ee
www.ironbaltic.com

INTRODUCTION

Thank you for choosing Iron Baltic product. This manual contains specifications for the trailer IB-1200 and instructions for product assembly, safe operation and maintenance. Unnecessary use of the trailer can result economic damage and personal injury, so it is very important that the person who using the product read and use this manual in accordance with the requirements. Any misuse of the product will release the manufacturer from liability for any damage or expense incurred.

NOTE: Photos and drawings in this manual may not necessarily depict the actual models of trailer or their accessories. They are merely given as a frame of reference and are based on the latest available information at the time of publication.

This symbol is used throughout the manual and on warning signs in order to warn users of the potential for serious injury. Before using the vehicle and trailer, carefully read the safety instructions and make sure that you have understood them. Follow all instructions and ensure that everyone who uses the equipment follows them!

SAFETY INSTRUCTIONS

Most accidents occur due to negligence or carelessness. Avoid accidents and follow the safety instructions given below. The ATV together with the trailer hitched to it form a long working machine, which is not easy to manoeuvre; therefore, operating in small and narrow areas can be a complicated task.

TRAINING

- Read thoroughly the safety instructions and terms of use.
- Never allow children to operate the vehicle or the trailer.
- Never allow adult persons to operate the vehicle or the trailer if they have not received the proper training
- Neither the vehicle nor the trailer can be used while drunk or under the influence of drugs that affect perception or reaction.
- Do not allow bystanders, children, or animals into the work zone.

PROHIBITED ACTIONS

- Never operate the trailer on overly steep slopes.
- Never operate the trailer without all the protective parts properly installed.
- Do not operate the trailer before you have carefully read the whole operation manual.
- Never drive faster than 20km/h, or what the vehicle manufacturer recommends (the lower speed must be observed).
- Never carry any passenger on the trailer.
- It is forbidden to mount attachments to the trailer that are not approved by the manufacturer

MANDATORY ACTIONS

- Follow all the instructions of the ATV manufacturer.
- Always use proper protective equipment (helmet etc.) when using the vehicle.
- Make sure that bystanders are moved to a safe distance when operating the trailer.
- Make sure that all of the safety stickers are in good condition. Replace damaged stickers as required.
- Reduce the speed of the ATV when working on a hillside or uneven terrain.
- Be careful when braking.
- The load to the ATV hitch ball should not exceed 60kg, or the weight specified by the manufacturer of the vehicle (the lower weight must be observed).
- The safe road-steadiness of the vehicle must always be ensured by using the correct accessories for the task in hand (chains, counterbalances, etc.).
- Distribute the load on the trailer as evenly as possible (place heavy pieces to the centre, on the axle).
- Always check that all components are properly installed.
- Check and tighten the bolts after the first working hour and then after every ten working hours.
- When unhooking the trailer, make sure there is no load on the trailer

IF SOMETHING HAPPENS DURING THE WORK THAT COULD DAMAGE THE PRODUCT, AN INSPECTION OF THE DEVICE MUST BE CARRIED OUT TO IDENTIFY POSSIBLE DAMAGE. DAMAGE (CRACKS IN CONSTRUCTION OR WELDS, DEFORMED PARTS) CAN ENDANGER PROPERTY AND HUMAN HEALTH. THE DEVICE MUST NOT BE USED BEFORE THE DAMAGE IS REMOVED.

MAKE SURE THAT THE TRAILER IS IN PERFECT WORKING CONDITION AND THAT THE TOWING COUPLING HEAD IS PROPERLY ATTACHED TO THE ATV HITCH BALL.

SAFETY LABELS

The safety labels shall be present on your trailer. If any of those labels is absent or gets damaged, contact your dealer in order to install new labels in place of the absent ones before operating the machine.

Meaning of safety labels

	Maximum permitted speed 20 km / h!
	Maximum load capacity 1200 kg!
	Never carry any passenger on the trailer!
	It is forbidden to drive slopes over 15°!
	When lowering the box, ensure that the limbs do not fall between the box and the frame!
	Trace the surroundings when tilting the load and make sure it is safe!
	After tilting the load, there may be an obstacle between the cargo box and ground, which may cause cargo box spontaneous lowering.
	Uneven load distribution may cause the load to move. Make sure that limbs do not get stuck between load and trailer!
	Read the manual before use!

PRODUCT DESCRIPTION

The Iron Baltic IB 1200 is a durable timber trailer that can be attached to the ATV or UTV and carry up to 1200 kg load.

The trailer is designed for ATVs and UTVs but can be towed with any other vehicle equipped with a 50 mm hitch ball. Trailer does not cause notable damage to the terrain and can be easily manoeuvre between trees, allowing access to places where large tractors are not accessible. The four-wheeled tandem axle, combined with wide tires, gives the trailer excellent off-road capabilities, allowing you to easily move over stumps and ditches.

The length of the trailer is adjustable, which allows to transport logs up to 3,5 meters in length. Trailer log bolsters are removable which is good when loading the trailer. In addition, the log bolsters are turnable, which means that contact with an obstacle does not cause major damage to the trailer.

Cargo box (86.2000) is designed for transporting various goods and materials. The front and rear panels of the box are removable and in addition, it is possible to add side extensions (86.2500) to the cargo box which allows to transport oversized loads. Cargo box tilting is possible by assembling the trailer with crane (23.3000).

Flatbed (86.5000) is designed for transporting various goods and materials. Thanks to the flat bottom, it can be used to transport pallets, for example. The side and end panels (86.5100) mounted on the flatbed can be open and are easy to remove, which allows to load the trailer from the side also. As an option, the flatbed can be fitted with side extensions (86.5200), a log and IBC container transport kit (86.5300), watering pipe (91.1030) and PVC cover (86.5400). Flatbed box tilting is possible by assembling the trailer with crane (23.3000).

The trailer crane (23.3000) is equipped with an electric winch and is designed to lift logs and other loads and it can used to tilt the cargo box also. With the crane, it is easy to mount the cargo box on to a trailer and can be done as a one-man job.

Standard equipment:

- Trailer
- Support wheel
- 360° rotating hitch
- Log bolsters

Optional extras:

- Electrical crane
- Cargo box
- Flatbed
- Rear lights

Product	**Trailer**
Model	86.1000
Dimensions	2880-3680 mm x 1300 mm x 1200 mm
Max load length	3000 mm
Load capacity	1200 kg
Weight	170 kg
Tires	22 x 11 – 8

Table 1: Trailer IB 1200 technical data

USER GUIDE

- Read the safety instructions before driving!
- Check tow coupling connection to the tow beam before ride.
- Before ride, make sure the trailer stand is up and secured.
- Before ride, check all removable accessories are secured and locked.
- Before ride, check if the towing coupling is securely connected with tow ball (check the indicator on tow coupling)
- Before ride, check tire condition and pressure (the exact tire pressure is 1,5 bar). If needed change the tires. Use only tires specified by the trailer manufacturer.
- Before ride, check tension of the wheel bolts.
- Load the trailer evenly and in such way that the centre of the load is as close to the axle as possible. If necessary, extend the trailer by changing the length of the drawbar. To adjust, loosen the locking nuts and tightening bolts on the frame tube and remove the pin. Then select the appropriate drawbar length according to the load being transported. Secure the length with a pin and tighten the tightening bolts and the locking nuts. The drawbar tube can be set to five different lengths:
  Length L1 is intended for carrying loads up to 1900 mm in length.
  Length L2 is intended for loads between 1900 mm and 2300 mm.
  Length L3 is intended for loads between 2300 mm and 2700 mm.
  Length L4 is intended for loads between 2700 mm and 3100 mm.
  Length L5 is intended for loads between 3100 mm and 3500 mm.

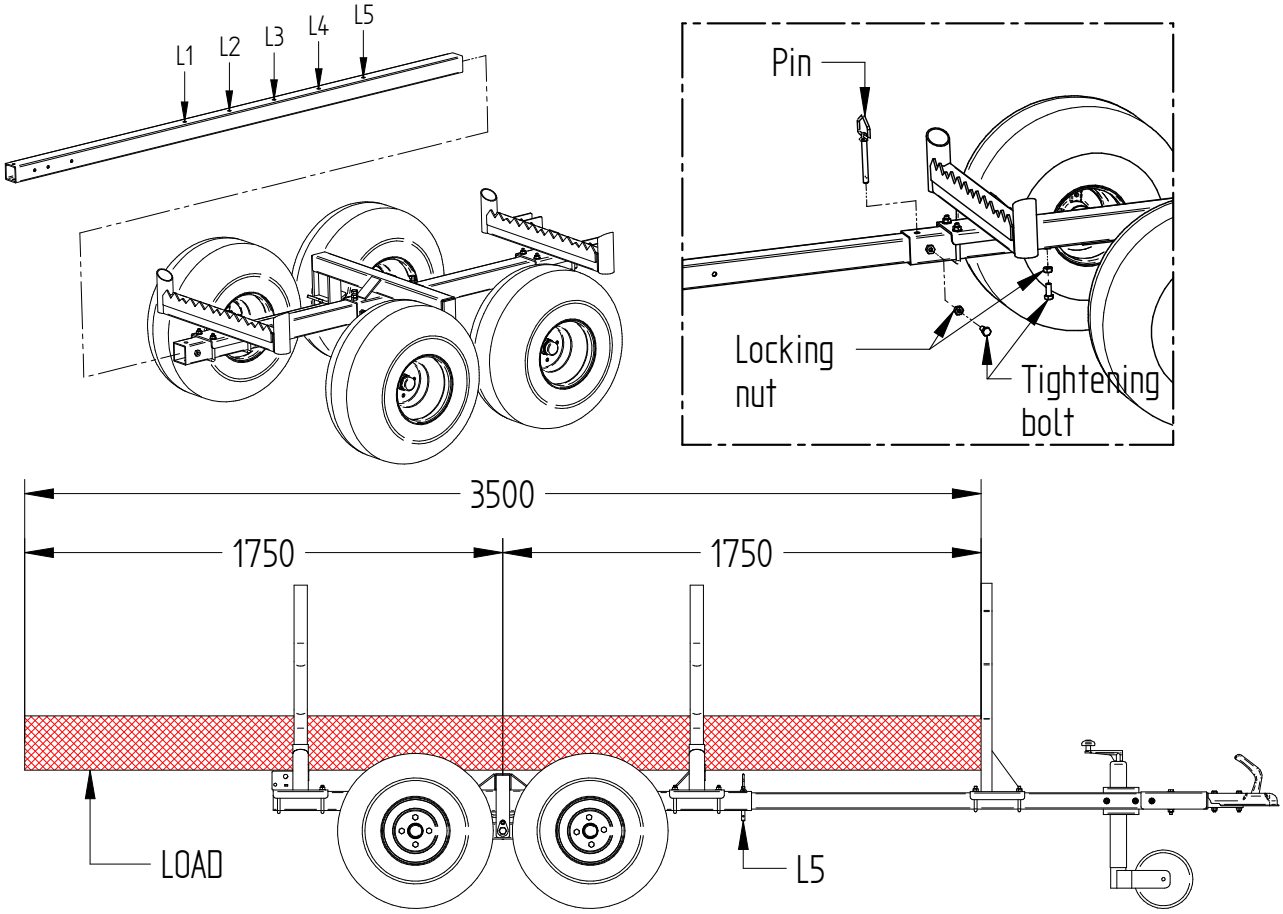

Example: Drawbar length L5, load length 3500 mm

- When loading take into account the capacity of the trailer and that the load to the ATV hitch ball should not exceed 60kg, or the weight specified by the manufacturer of the vehicle (lower weight must be observed). Make sure that the load does not extend over the edges.

- The highest speed when transporting a load is 20km/h, or what the vehicle manufacturer recommends (the lower speed must be observed).
- Apply the ATV parking brake before working with crane.
- Make sure that the support legs are on hard, level ground and locked in, before operating with crane.
- Take into account the centre of the gravity, when lifting the cargo box to the trailer. Stop lifting at a height of half a meter and check the balance of the cargo box.
- When lifting, make sure that the load cannot slip on the lifting ropes.
- Do not start lifting unless you are sure that the lifting equipment is in good condition.
- Do not exceed the maximum capacity of the crane.
- When installing cargo / flatbed with crane on a trailer:
    - Stop the trailer as close to the side of the cargo / flatbed as possible
    - Apply the ATV parking brake.
    - Set drawbar length to length L1.
    - Fix the crane support legs to a hard and level surface.
    - Set the crane boom to the highest position and remove the pin that restricts lateral movement.
    - Attach the 4-prong lifting strap to the lifting points on the box. In case of the flatbed box, side panels must be removed before.
    - Start lifting, if necessary, guide the movement of the box by hand.
      NB! It is forbidden to lift the cargo / flatbed with a load in it!
    - Fix the box to the rear carrier with pins.
- When using cargo / flatbed, make sure that the box clamp is locked before loading the load.
- To tilt the load from the cargo / flatbed, apply the ATV parking brake, open the box clamp and lift the box / flatbed.
- When tilting the cargo box / flatbed with a crane, use the highest crane boom position and the shortest boom length.
- When tilting the cargo box with a crane, prefer to use the lifting adapter in front of the box and use the lifting point/eye inside the box only when necessary.

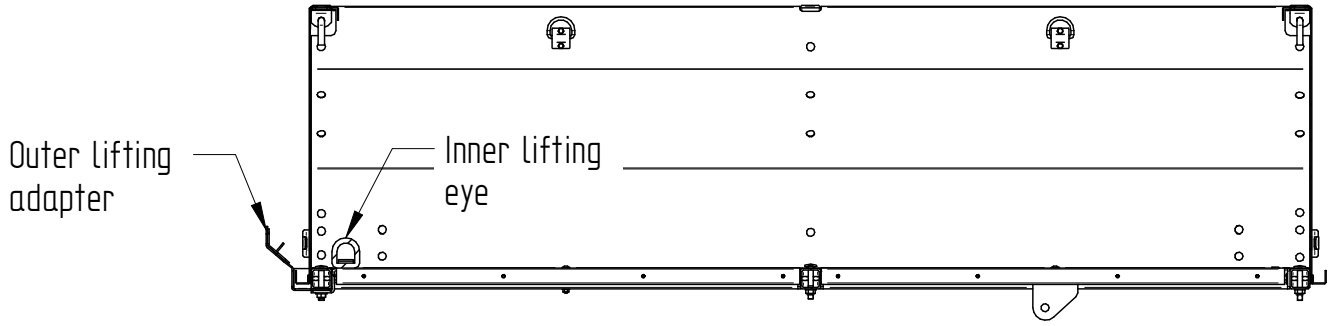

MAINTENANCE

Maintenance activity:	Before and after work	Weekly	Monthly	Seasonally
Clean the trailer	●	●	●	●
Tire pressure, wheel bolts, tow coupling connection check	●	●	●	●
Visual inspection of parts fastening	●	●	●	●
Checking the condition of all connecting parts		●	●	●
Inspection of safety labels		●	●	●
Lubricate the tow coupling and swing arms			●	●
Checking the wear rate of metal parts			●	●

- Always wash the trailer after use. To remove most of the dirt, use running water. Usual car shampoo can be used for washing the trailer.
- Only change trailer tire on flat and hard surface, by placing jack stand under the vertical axle beam corner.
- If the tow coupling moves difficultly, add oil to places showed on the diagram or contact manufacturer or licensed reseller.

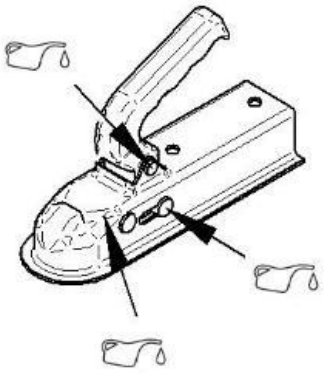

SPETSIFICATION

Pos.	Description	Code	Amount
1	Axle	86.1001K	1
2	Frame tube	86.1003K	1
3	Front carrier	86.1005K	1
4	Rear carrier	86.1006K	1
5	Log bolster	86.1010K	4
6	Drawbar	86.1014	1
7	U-bolt 70x70	86.1015	4
8	Tow coupling 1700	86.1050	1
9	Bolt fixing plate	23.1005	2
10	U-bolt 60x60	23.1006	2
11	Swing arm	23.1040	2
12	Protective fence	23.1080	1
13	Pin with chain 1/2" x 3-1/2"	OT.53.01.010	1
14	Support wheel bracket	OT.10.02.058	1
15	Support wheel	OT.10.02.057	1
16	Wheel 22x11x8 (E4-106R) (left)	OT.10.03.123	2
17	Wheel 22x11x8 (E4-106R) (right)	OT.10.03.124	2
18	Wheel bolt M12x1,5x25	OT.02.09.010	16
19	Pipe cap 48,3x2-3,6	OT.25.00.100	4
20	Grease nipple M6	OT.17.00.005	2
21	Bolt M6x16 DIN933	OT.02.02.050	2
22	Bolt M12x30 DIN933	OT.02.02.390	6
23	Bolt M10x85 DIN931	OT.02.01.049	4
24	Bolt M16x130 DIN931	OT.02.01.160	2
25	Washer Ø6/15 SFS3738	OT.04.03.020	2
26	Washer Ø 10 DIN125	OT.04.01.040	20
27	Washer Ø 16 DIN125	OT.04.01.060	2
28	Nut M12 DIN934	OT.03.01.050	6
29	Nyloc nut M10 DIN985	OT.03.02.050	16
30	Nyloc nut M16 DIN985	OT.03.02.070	2

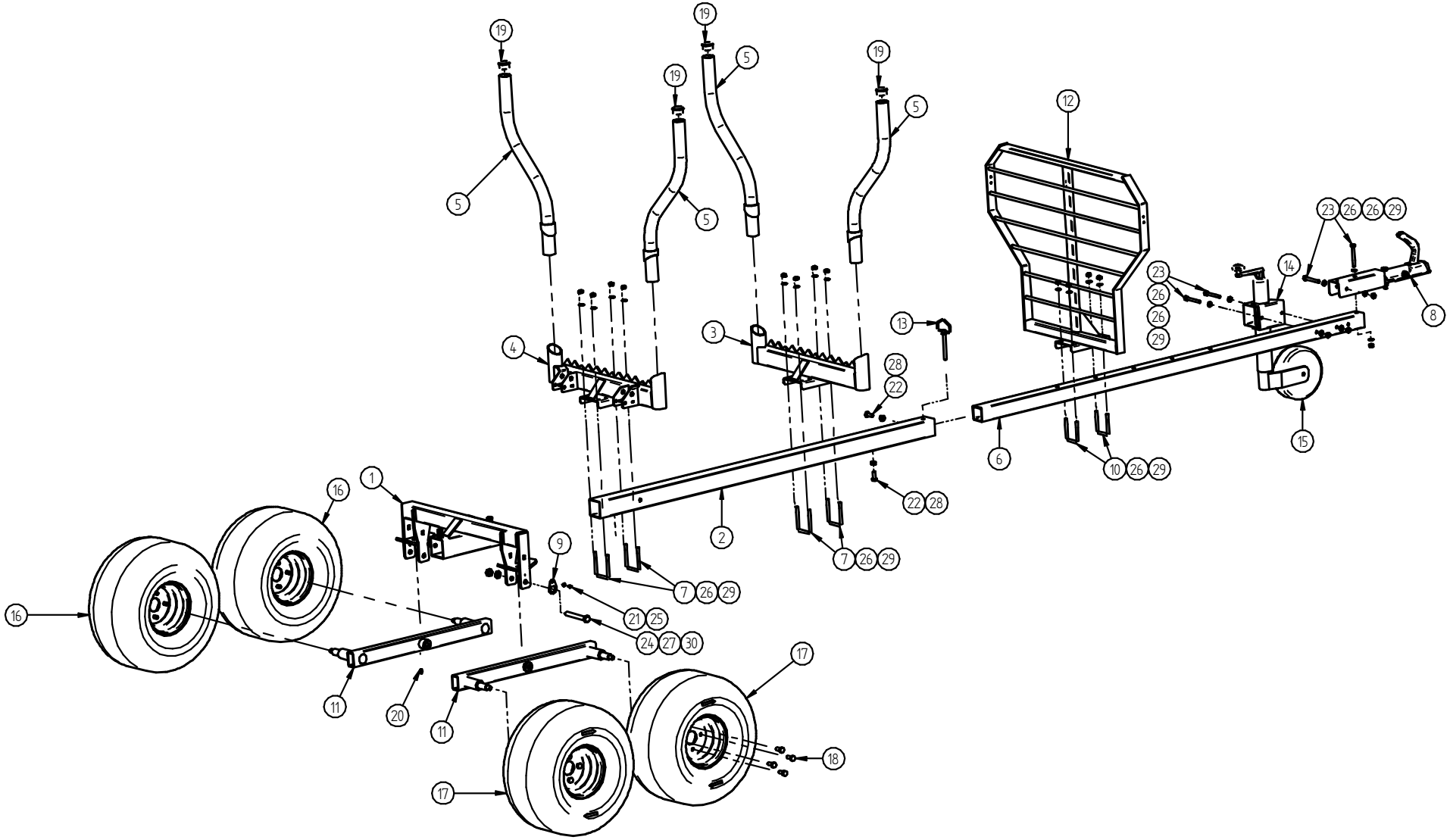
19
5
12
23
26
29
14
8
13
3
4
28
22
6
15
10
1
16
9
2
7
21
25
24
27
30
11
20
17
18

ASSEMBLING GUIDE

Step 1 Install swing arms (Pos.11) to axle beam (Pos.1). Make sure that the grease nipple (Pos.20) of the swing arm is facing downwards. For fastening use M16x130 bolt (Pos.24), Ø16 mm washer (Pos.27) and M16 nyloc nut (Pos.30). Before tightening the swing-arm mounting bolt, fix it position with bolt fixing plate (Pos.9) by attaching it to the axle with M6x16 bolt (Pos.21) and Ø6 mm washer (Pos.25).

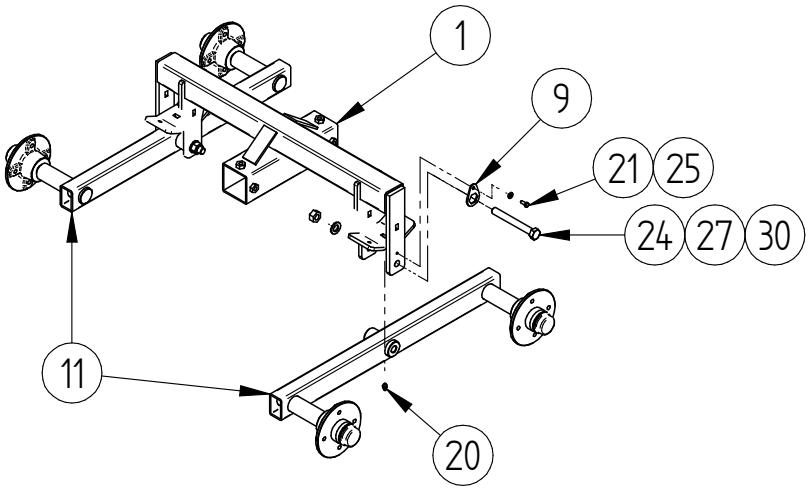

Step 2 Install wheels (Pos.17 and Pos.18). Watch tire direction and that the tire valve is facing outside.

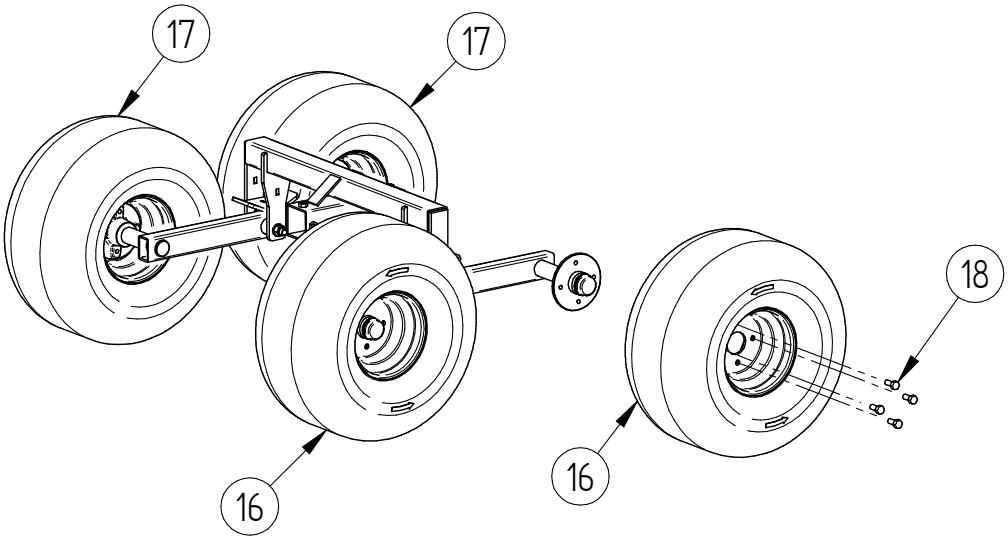

Step 3 Install frame tube (Pos.2) to axle beam. Make sure that the pin hole (drawbar mounting hole) in the frame tube is vertical to ground and is on the front side of trailer! If you are using the trailer as timber trailer then place the axle beam in the middle of the expected load to be carried. If you use trailer with a cargo box, the position of the axle beam is 1085 mm from the front edge of the frame tube. If you use trailer with a flatbed box, the position of the axle is 1125 mm from the front edge of the frame tube. Secure frame tube position with M12x30 bolts (Pos.22) and lock the bolts with M12 nuts (Pos.28).

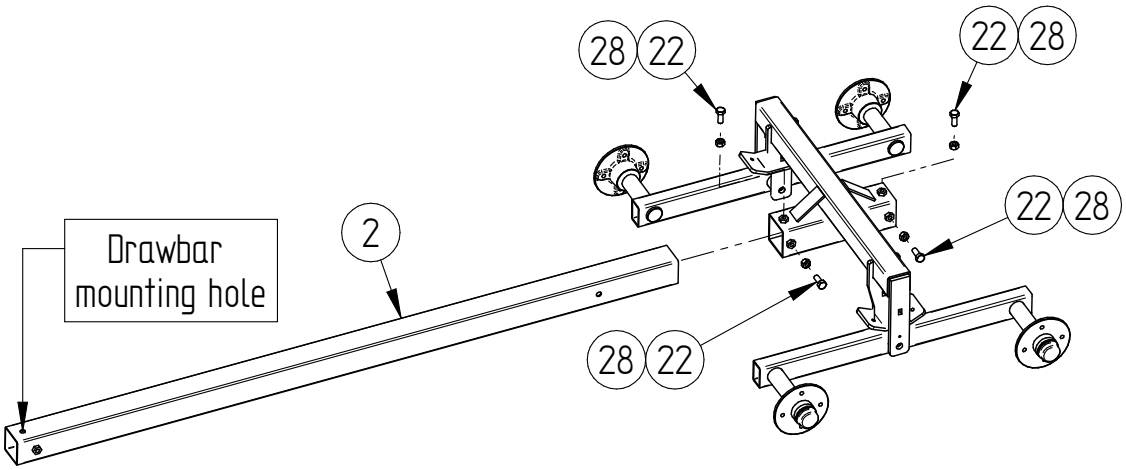

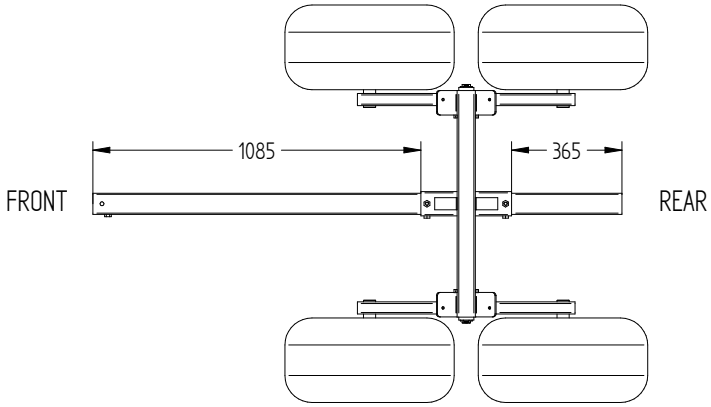

Trailer with cargo box

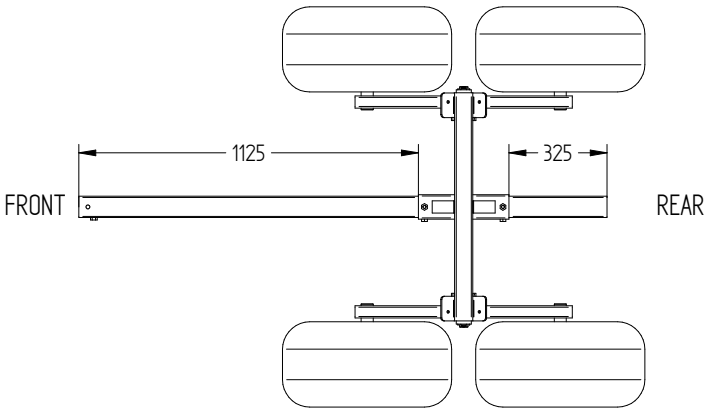

Trailer with flatbed

Step 4 Install rear carrier (Pos.4) to frame tube so that the edge of the carrier is equal to edge of the frame tube. Make sure that cargo box mounting holes are on the rear side of the trailer. For fastening use 70x70 U-bolts (Pos.7), Ø10 mm washers (Pos.26) and M10 nyloc nuts (Pos.29).

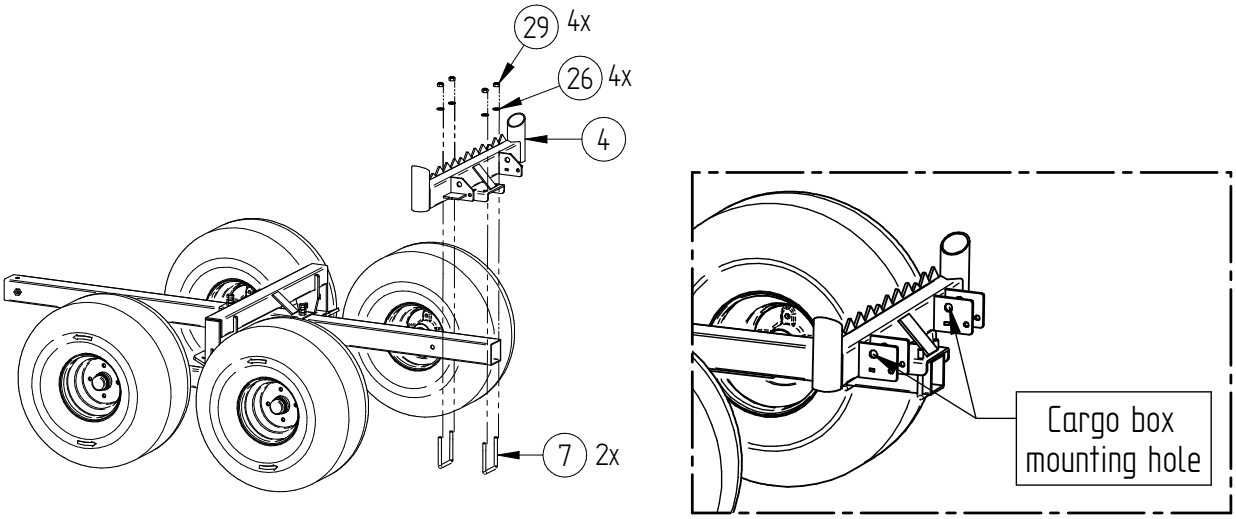

Step 5 Install front carrier (Pos.3) to frame tube. For fastening use 70x70 U-bolts (Pos.7), Ø10 mm washers (Pos.26) and M10 nyloc nuts (Pos.29).

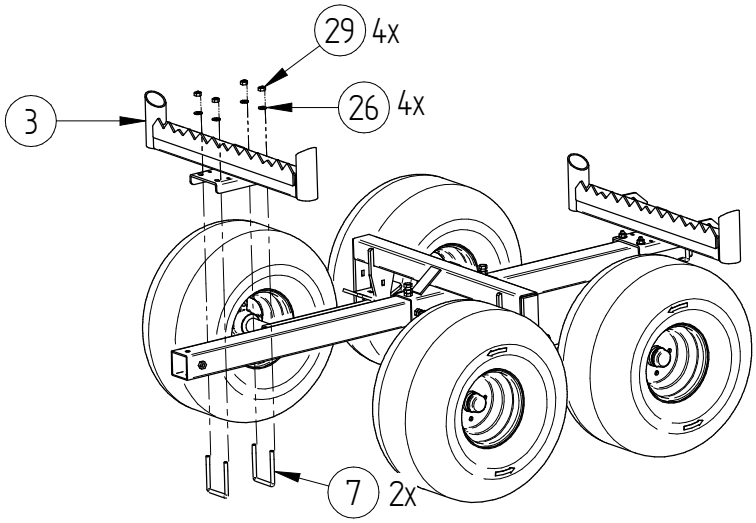

Step 6 Install drawbar (Pos.6). Fix the length of the drawbar to the first (L1) position with the pin (Pos.13) (required for correct installation of the protective grille in step 9). Then tighten the M12x30 bolts (Pos.22) and lock the bolts with the M12 nuts (Pos.28).

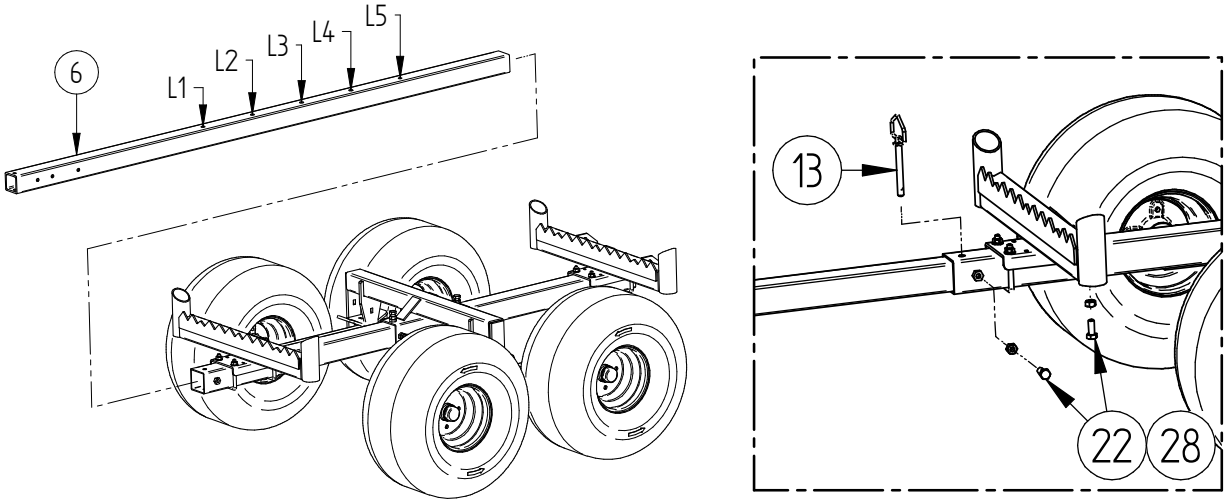

Step 7 Install tow coupling (Pos.8) For fastening use M10x85 bolts (Pos.23), Ø10 mm washers (Pos.26) and M10 nyloc nuts (Pos.29).

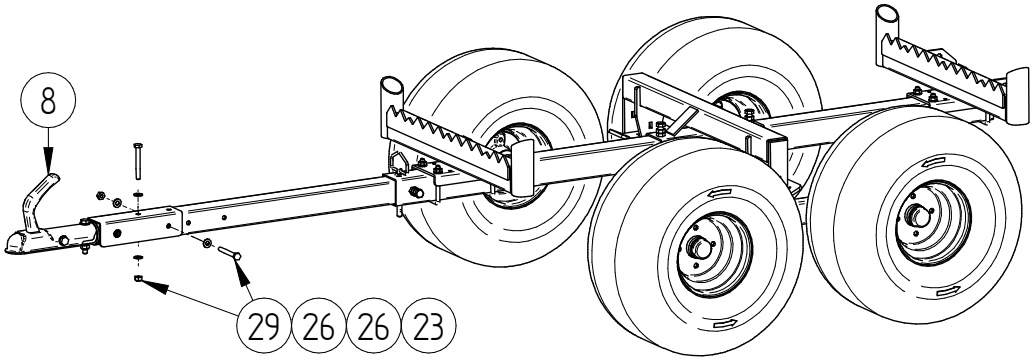

Step 8 Install support wheel bracket (Pos.14) and support wheel (Pos.15). For fastening use M10x85 bolts (Pos.23), Ø10 mm washers (Pos.26) and M10 nyloc nuts (Pos.29).

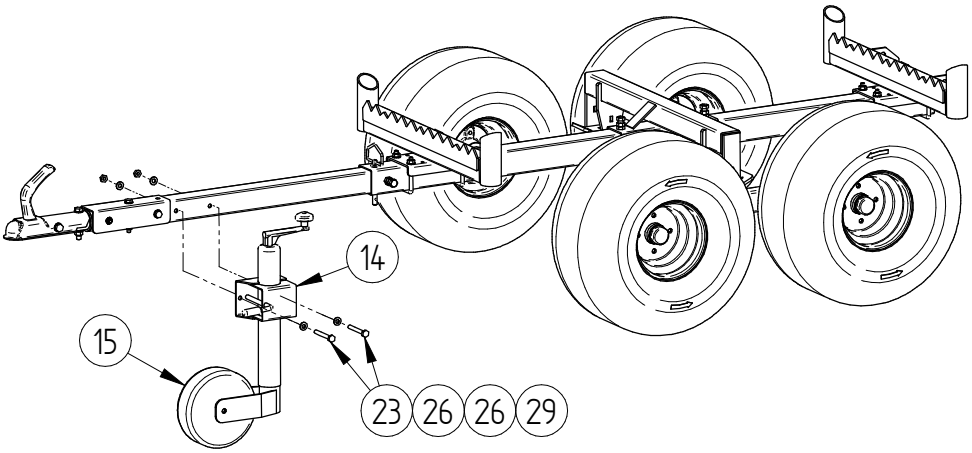

Step 9 Install protective fence (Pos.12) to drawbar (Pos.6). Place protective fence so that rear edge is against the frame tube (Pos.2). NB! The drawbar tube must be locked in position L1 (see step 6). Use 60x60 U-bolts (Pos.10), Ø10 mm washers (Pos.26) and M10 nyloc nuts (Pos.29) to fasten the protective grille.

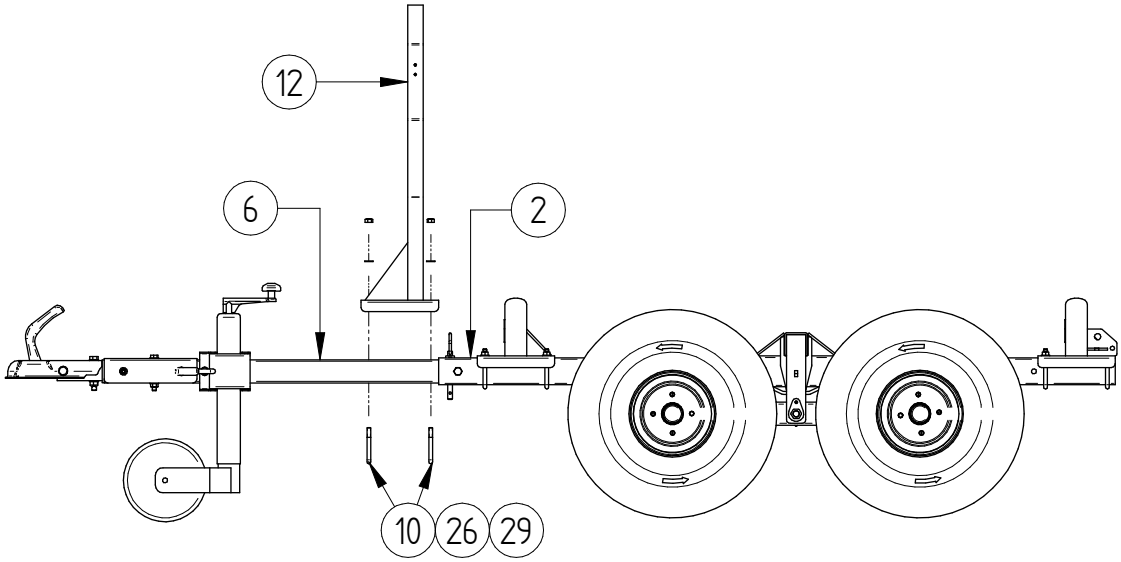

Step 10

Install log bolsters (Pos.5) and pipe caps (Pos.19).

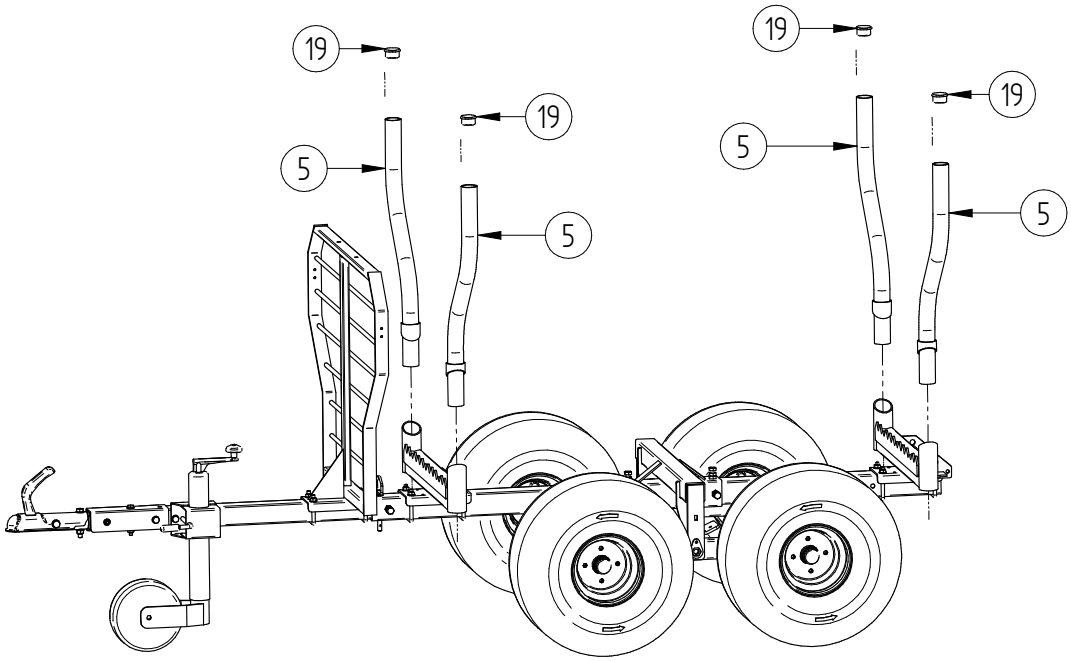

IRON BALTIC OÜ
Joa tee 17, Vääna, Harku vald, 76903
Estonia, Europe

+372 6 533 711
sales@ironbaltic.com

www.ironbaltic.com
www.facebook.com/ironbaltic
www.youtube.com/user/ironbalticltd